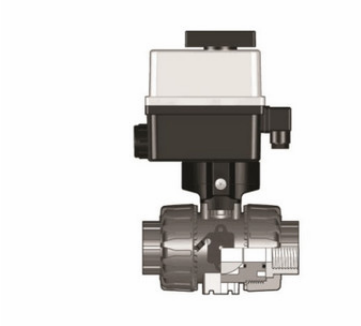

Шаровой кран VKD ПВХ с эл.приводом 24V AC/DC, резьбовые окончания, EPDM, FIP 2"

Артикул	R	DN	PN	E	H	H1	L	Z	B	B1	g
VKDFVEL038E	3/8”	10	16	54	103	65	12**	80	205	29	1785
VKDFVEL012E	1/2”	15	16	54	110	65	15	80	205	29	1775
VKDFVEL034E	3/4”	20	16	65	116	70	16	83	216	34.5	1903
VKDFVEL100E	1”	25	16	73	134	78	19	96	221	39	2011
VKDFVEL114E	1” 1/4	32	16	86	153	88	21	110	238	46	2369
VKDFVEL112E	1” 1/2	40	16	98	156	93	21	113	244	52	2601
VKDFVEL200E	2”	50	*10	122	186	111	26	135	261	62	3218
VKDFVEL212E	2”1/2	65	16	164	235	133	30.2	174.6	295	87	6800
VKDFVEL300E	3”	80	16	203	270	149	33.2999999999999997	203.4	308	105	9620
VKDFVEL400E	4”	100	16	238	308	167	39.2999999999999997	229.4	325	129	13460
VKDDVEL075E	75	65	16	164	284	133	44	295	87	6800	
VKDDVEL090E	90	80	16	203	300	149	51	308	105	9620	
VKDDVEL110E	110	100	16	238	340	167	61	325	129	13460	