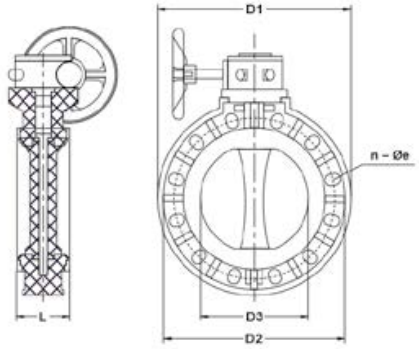


Затвор дисковый с редуктором PP-H IPS (Model A) d14" (DN350)

| Артикул | Размер | DN | d | C1 | C2 | H | H1 | H2 | W | D | D2 | M | N | L | n | Крутящий момент | PN |
|---|---|---|---|---|---|---|---|---|---|---|---|---|---|---|---|---|---|
| IFKOMRM225E | 8" | 200 | 210 | 290 | 298 | 443 | 205 | 167 | 72 | 335 | 136 | 102 | 12 | 230 | 8-23 | 80 | 10 |
| IFKOMRM315F | 12" | 300 | 290 | 400 | 432 | 625 | 302 | 243 | 98 | 485 | 136 | 125 | 12 | 251 | 12-25 | 110 | 10 |
| IFKOMRM840E | 40" | 1000 | 1230 | 1160 | 935 | 236 | 28-36x52 | | | | | | | | | | |
| IFKOMRM814F | 14" | 350 | 533 | 460 | 340 | 127 | 16-23x25 | | | | | | | | | | |
| IFKOMRM816F | 16" | 400 | 597 | 515 | 399 | 140 | 16-23x43 | | | | | | | | | | |
| IFKOMRM814E | 14" | 350 | 533 | 460 | 340 | 127 | 16-23x25 | | | | | | | | | | |
| IFKOMRM832E | 32" | 800 | 1060 | 950 | 755 | 220 | 24-41x60 | | | | | | | | | | |
| IFKOMRM832F | 32" | 800 | 1060 | 950 | 755 | 220 | 24-41x60 | | | | | | | | | | |
| IFKOMRM280F | 10" | 250 | 251 | 350 | 362 | 532 | 257 | 205 | 92 | 410 | 136 | 125 | 12 | 230 | 12-25 | 90 | 10 |
| IFKOMRM315E | 12" | 300 | 290 | 400 | 432 | 625 | 302 | 243 | 98 | 485 | 136 | 125 | 12 | 251 | 12-25 | 110 | 10 |
| IFKOMRM816E | 16" | 400 | 597 | 515 | 399 | 140 | 16-23x43 | | | | | | | | | | |
| IFKOMRM818E | 18" | 450 | 635 | 565 | 446 | 150 | 20-26x28,5 | | | | | | | | | | |
| IFKOMRM824E | 24" | 600 | 815 | 725 | 570 | 170 | 20-35x47,5 | | | | | | | | | | |
| IFKOMRM828E | 28" | 700 | 928 | 840 | 670 | 185 | 24-31x44 | | | | | | | | | | |
| IFKOMRM840F | 40" | 1000 | 1230 | 1160 | 935 | 236 | 28-36x52 | | | | | | | | | | |
| IFKOMRM820E | 20" | 500 | 700 | 620 | 494 | 150 | 20-26x44 | | | | | | | | | | |
| IFKOMRM225F | 8" | 200 | 210 | 290 | 298 | 443 | 205 | 167 | 72 | 335 | 136 | 102 | 12 | 230 | 8-23 | 80 | 10 |
| IFKOMRM818F | 18" | 450 | 635 | 565 | 446 | 150 | 20-26x28,5 | | | | | | | | | | |
| IFKOMRM824F | 24" | 600 | 815 | 725 | 570 | 170 | 20-35x47,5 | | | | | | | | | | |
| IFKOMRM828F | 28" | 700 | 928 | 840 | 670 | 185 | 24-31x44 | | | | | | | | | | |
| IFKOMRM280E | 10" | 250 | 251 | 350 | 362 | 532 | 257 | 205 | 92 | 410 | 136 | 125 | 12 | 230 | 12-25 | 90 | 10 |
| IFKOMRM820F | 20" | 500 | 700 | 620 | 494 | 150 | 20-26x44 | | | | | | | | | | |