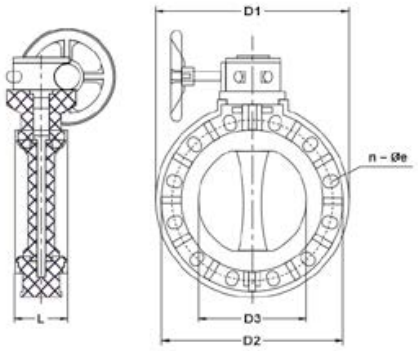


Затвор дисковый ПВХ с редуктором промышленный IPS (Model B) 20"

| Артикул | Размер | DN | D1, мм | D2, мм | D3, мм | L, мм | n–Ø |
|---|---|---|---|---|---|---|---|
| IFKOVRM814E | 14" | 350 | 533 | 460 | 340 | 127 | 16–23×25 |
| IFKOVRM816E | 16" | 400 | 597 | 515 | 399 | 140 | 16–23×43 |
| IFKOVRM818E | 18" | 450 | 635 | 565 | 446 | 150 | 20–26×28,5 |
| IFKOVRM820E | 20" | 500 | 700 | 620 | 494 | 150 | 20–26×44 |
| IFKOVRM824E | 24" | 600 | 815 | 725 | 570 | 170 | 20–35×47,5 |
| IFKOVRM828E | 28" | 700 | 928 | 840 | 670 | 185 | 24–31×44 |
| IFKOVRM832E | 32" | 800 | 1060 | 950 | 755 | 220 | 24–41×60 |
| IFKOVRM840E | 40" | 1000 | 1230 | 1160 | 935 | 236 | 28–36×52 |
| IFKOVRM814F | 14" | 350 | 533 | 460 | 340 | 127 | 16–23×25 |
| IFKOVRM816F | 16" | 400 | 597 | 515 | 399 | 140 | 16–23×43 |
| IFKOVRM818F | 18" | 450 | 635 | 565 | 446 | 150 | 20–26×28,5 |
| IFKOVRM820F | 20" | 500 | 700 | 620 | 494 | 150 | 20–26×44 |
| IFKOVRM824F | 24" | 600 | 815 | 725 | 570 | 170 | 20–35×47,5 |
| IFKOVRM828F | 28" | 700 | 928 | 840 | 670 | 185 | 24–31×44 |
| IFKOVRM832F | 32" | 800 | 1060 | 950 | 755 | 220 | 24–41×60 |
| IFKOVRM840F | 40" | 1000 | 1230 | 1160 | 935 | 236 | 28–36×52 |