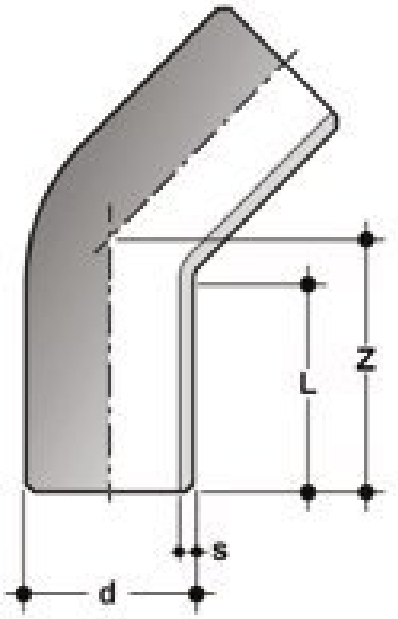


Отвод 45° для стыковой сварки PP-H FIP (PN10) d225 SDR11 PN10

| Артикул | d | L | s | Z | g |
|---|---|---|---|---|---|
| HBM11020 | 20 | 52 | 72 | 1,9 | 19 |
| HBM11025 | 25 | 57 | 76 | 2,3 | 30 |
| HBM11032 | 32 | 71 | 90 | 2,9 | 56 |
| HBM11040 | 40 | 73 | 95 | 3,7 | 88 |
| HBM11050 | 50 | 62 | 76 | 4,6 | 110 |
| HBM11063 | 63 | 66 | 88 | 5,8 | 205 |
| HBM11075 | 75 | 71 | 90 | 6,8 | 290 |
| HBM11090 | 90 | 83 | 105 | 8,2 | 460 |
| HBM11110 | 110 | 93 | 121 | 10 | 785 |
| HBM11125 | 125 | 98 | 137 | 11,4 | 1130 |
| HBM11140 | 140 | 122 | 168 | 12,7 | 1685 |
| HBM11160 | 160 | 143 | 190 | 14,6 | 2550 |
| HBM11180 | 180 | 141 | 196 | 16,4 | 3285 |
| HBM11200 | 200 | 153 | 207 | 18,2 | 4540 |
| HBM11225 | 225 | 153 | 210 | 20,5 | 5750 |
| HBM11250 | 250 | 134 | 220 | 22,7 | 7875 |
| HBM11280 | 280 | 143 | 227 | 25,4 | 10060 |
| HBM11315 | 315 | 155 | 250 | 28,6 | 13675 |