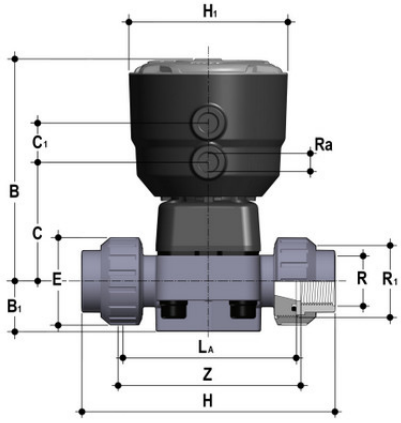


Мембранный клапан DKB ХПВХ с пневмоприводом НЗ, PN6 с втулочными окончаниями R1" (DN25)

| Артикул | d | DN | PN | B | B[1] | C | C[1] | H | H[1] | L |
|---|---|---|---|---|---|---|---|---|---|---|
| DKBDCNC020E | 20 | 15 | 6 | 134 | 25 | 66 | 24 | 124 | 97 | 16 |
| DKBDCNC025E | 25 | 20 | 6 | 137 | 30 | 69 | 24 | 144 | 97 | 19 |
| DKBDCNC032E | 32 | 25 | 6 | 145 | 33 | 78 | 24 | 154 | 97 | 22 |
| DKBDCNC040E | 40 | 32 | 6 | 149 | 30 | 82 | 24 | 174 | 97 | 26 |
| DKBDCNC050E | 50 | 40 | 6 | 193 | 35 | 112 | 24 | 194 | 126 | 31 |
| DKBDCNC063E | 63 | 50 | 6 | 231 | 46 | 142 | 24 | 224 | 157 | 38 |
| DKBDCNC075E | 75 | 65 | 6 | 231 | 46 | 142 | 24 | 284 | 157 | 44 |
| DKBUICNC020E | | | | | | | | | | |
| DKBUICNC025E | | | | | | | | | | |
| DKBUICNC032E | | | | | | | | | | |
| DKBUICNC040E | | | | | | | | | | |
| DKBUICNC050E | | | | | | | | | | |
| DKBUICNC063E | | | | | | | | | | |
| DKBUFCNC012E | | | | | | | | | | |
| DKBUFCNC034E | | | | | | | | | | |
| DKBUFCNC100E | | | | | | | | | | |
| DKBUFCNC114E | | | | | | | | | | |
| DKBUFCNC200E | | | | | | | | | | |
| DKBOCNC025E | | | | | | | | | | |
| DKBOCNC040E | | | | | | | | | | |
| DKBOCNC075E | | | | | | | | | | |
| DKBUFCNC112E | | | | | | | | | | |
| DKBOCNC020E | | | | | | | | | | |
| DKBOCNC050E | | | | | | | | | | |
| DKBOCNC032E | | | | | | | | | | |
| DKBOCNC063E | | | | | | | | | | |