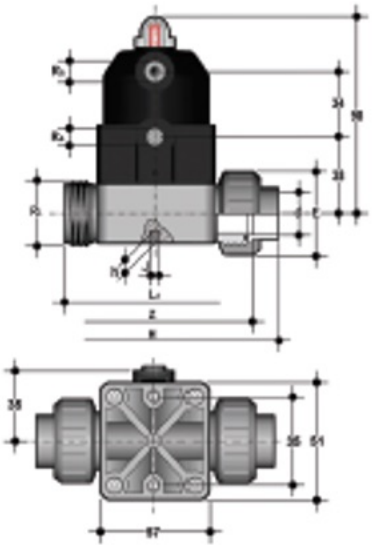

Компактный мембранный клапан ПВХ с пневмоприводом, CM, FKM, FIP d20 (DN15)

Артикул	d	DN	PN	E	R1	Ra	LA	Z	H	h	J	g
CMUIVNO020F	20	15	6	41	1''	G 1/4''	90	97.5	129.5	8	M5	340
CMUFVNO012F	1/2''	15	6	41	1''	G 1/4''	90	97.5	129.5	8	M5	340
CMUFVNO012P	1/2''	15	6	41	1''	G 1/4''	90	97.5	129.5	8	M5	340
CMUIVNO020P	20	15	6	41	1''	G 1/4''	90	97.5	129.5	8	M5	340
CMIVNO016E	16	12	6	G 1/4''	14	75	8	M5	340			
CMIVNO020E	20	15	6	G 1/4''	16	75	8	M5	340			
CMIVNO020F	20	15	6	G 1/4''	16	75	8	M5	340			
CMIVNO016P	16	12	6	G 1/4''	14	75	8	M5	340			
CMIVNO020P	20	15	6	G 1/4''	16	75	8	M5	340			
CMFVNO038F	3/8''	12	6	G 1/4''	11.5	75	8	M5	340			
CMFVNO012F	1/2''	15	6	G 1/4''	15	75	8	M5	340			
CMFVNO012P	1/2''	15	6	G 1/4''	15	75	8	M5	340			
CMFVNO038P	3/8''	12	6	G 1/4''	11.5	75	8	M5	340			
CMDVNO020F	20	15	6	12.5	G 1/4''	17	124	8	M5	340		
CMDVNO020P	20	15	6	12.5	G 1/4''	17	124	8	M5	340		